Product Approval
USER: Public User

FL #	FL14444-R4
Application Type	Revision
Code Version	2020
Application Status	Approved
Comments	
Archived	☐
Product Manufacturer	Rolling Door Industries, LLC
Address/Phone/Email	8214 NW 64th St Miami, FL 33166 (305) 599-9977 mail@rolling-door.com
Authorized Signature	Ernesto Rodriguez mail@rolling-door.com
Technical Representative Address/Phone/Email	
Quality Assurance Representative Address/Phone/Email	
Category	Exterior Doors
Subcategory	Roll-Up Exterior Door Assemblies
Compliance Method	Evaluation Report from a Florida Registered Architect or a Licensed Florida Professional Engineer ☐ Evaluation Report - Hardcopy Received
Florida Engineer or Architect Name who developed the Evaluation Report	Walter A. Tillit Jr., P.E.
Florida License	PE-44167
Quality Assurance Entity	National Accreditation and Management Institute
Quality Assurance Contract Expiration Date	12/31/2021
Validated By	John W. Knezevich, PE ☑ Validation Checklist - Hardcopy Received
Certificate of Independence	FL14444_R4_COI_ROLLING DOORS INDUSTRIES COI 20-212.pdf FL14444_R4_COI_ROLLING DOORS INDUSTRIES COI 20-213.pdf FL14444_R4_COI_ROLLING DOORS INDUSTRIES COI 20-214.pdf

Referenced Standard and Year (of Standard)

Standard	Year
TAS 201	1994
TAS 202	1994
TAS 203	1994

Equivalence of Product Standards
Certified By

Sections from the Code

Product Approval Method	Method 1 Option D
Date Submitted	10/06/2020
Date Validated	10/08/2020
Date Pending FBC Approval	10/23/2020
Date Approved	12/15/2020

Summary of Products

FL #	Model, Number or Name	Description
14444.1	14'-2" MAX. WIDE 24 GAGE SLAT ROLL UP DOOR	COLD FORMED SLATS INTERLOCKED TOGETHER AND RETAINED BY TRACKS TO PROVIDE HURRICANE PROTECTION AND ENTRANCE CLOSURE.
Limits of Use **Approved for use in HVHZ:** Yes **Approved for use outside HVHZ:** Yes **Impact Resistant:** Yes **Design Pressure:** +60/-60 **Other:** Large Missile. Max span is 14'-2" for +/- 60 psf ASD Design Load. See sheet 3 of installation drawings for other spans and pressures.		**Installation Instructions** FL14444_R4_II_ROLLING DOORS INDUSTRIES DRWG 20-214.pdf Verified By: Walter A. Tillit Jr., P.E. PE 44167 Created by Independent Third Party: Yes **Evaluation Reports** FL14444_R4_AE_ROLLING DOORS INDUSTRIES PER 20-214.pdf Created by Independent Third Party: Yes
14444.2	16'-2" MAX. WIDE 22 GAGE SLAT ROLL UP DOOR	COLD FORMED SLATS INTERLOCKED TOGETHER AND RETAINED BY TRACKS TO PROVIDE HURRICANE PROTECTION AND ENTRANCE CLOSURE.
Limits of Use **Approved for use in HVHZ:** Yes **Approved for use outside HVHZ:** Yes **Impact Resistant:** Yes **Design Pressure:** +65/-65 **Other:** Large Missile. Max span is 16'-2" for +/- 65 psf ASD Design Load. See sheet 3 of installation drawings for other spans and pressures.		**Installation Instructions** FL14444_R4_II_ROLLING DOORS INDUSTRIES DRWG 20-212.pdf Verified By: Walter A. Tillit, Jr. P.E. PE 44167 Created by Independent Third Party: Yes **Evaluation Reports** FL14444_R4_AE_ROLLING DOORS INDUSTRIES PER 20-212.pdf Created by Independent Third Party: Yes
14444.3	26'-0'' MAX. WIDE 20 GAGE SLAT ROLL UP DOOR	COLD FORMED SLATS INTERLOCKED TOGETHER AND RETAINED BY TRACKS TO PROVIDE HURRICANE PROTECTION AND ENTRANCE CLOSURE.
Limits of Use **Approved for use in HVHZ:** Yes **Approved for use outside HVHZ:** Yes **Impact Resistant:** Yes **Design Pressure:** +70/-70 **Other:** Large Missile. Max span is 26'-0" for +/- 70 psf ASD Design Load. See sheet 3 of installation drawings for other spans and pressures.		**Installation Instructions** FL14444_R4_II_ROLLING DOORS INDUSTRIES DRWG 20-213.pdf Verified By: Walter A. Tillit Jr., P.E. PE 44167 Created by Independent Third Party: Yes **Evaluation Reports** FL14444_R4_AE_ROLLING DOORS INDUSTRIES PER 20-213.pdf Created by Independent Third Party: Yes

Back Next

Contact Us :: 2601 Blair Stone Road, Tallahassee FL 32399 Phone: 850-487-1824

The State of Florida is an AA/EEO employer. Copyright 2007-2013 State of Florida. :: Privacy Statement :: Accessibility Statement :: Refund Statement

Under Florida law, email addresses are public records. If you do not want your e-mail address released in response to a public-records request, do not send electronic mail to this entity. Instead, contact the office by phone or by traditional mail. If you have any questions, please contact 850.487.1395. *Pursuant to Section 455.275(1), Florida Statutes, effective October 1, 2012, licensees licensed under Chapter 455, F.S. must provide the Department with an email address if they have one. The emails provided may be used for official communication with the licensee. However email addresses are public record. If you do not wish to supply a personal address, please provide the Department with an email address which can be made available to the public. To determine if you are a licensee under Chapter 455, F.S., please click here .

Product Approval Accepts:

Credit Card Safe securityMETRICS

GENERAL NOTES:

1– ROLL–UP DOOR SHOWN ON THIS PRODUCT EVALUATION DOCUMENT (P.E.D.) HAS BEEN VERIFIED FOR CODE COMPLIANCE IN ACCORDANCE WITH THE 2020 (7th EDITION) OF THE FLORIDA BUILDING CODE.

DESIGN WIND LOADS SHALL BE DETERMINED AS PER SECTION 1620 OF THE ABOVE MENTIONED CODE, FOR A WIND SPEED AS REQUIRED BY JURISDICTION WHERE THIS PRODUCT WILL BE INSTALEED AND FOR A DIRECTIONALITY FACTOR Kd=0.85, USING ASCE 7–16 AND SHALL NOT EXCEED THE MAXIMUM (A.S.D.) DESIGN PRESSURE RATINGS INDICATED ON NOTE 1.

IN ORDER TO VERIFY THE ABOVE CONDITION, ULTIMATE DESIGN WIND LOADS DETERMINED PER ASCE 7–16 SHALL BE FIRST REDUCED TO A.S.D. DESIGN WIND LOADS BY MULTIPLYING THEM BY 0.6 IN ORDER TO COMPARE THESE W/ MAX. (A.S.D.) DESIGN PRESSURE RATINGS INDICATED ON NOTE 1.

ROLL–UP DOOR'S ADEQUACY FOR IMPACT AND FATIGUE RESISTANCE HAS BEEN VERIFIED IN ACCORDANCE WITH SECTION 1626 OF THE ABOVE MENTIONED CODE AS PER FENESTRATION TESTING LABORATORY, INC. REPORT # 6444, PER TAS–201, TAS–202 & TAS–203 PROTOCOLS.

MAX. A.S.D. DESIGN PRESSURE RATING: +70.0, –70.0 PSF

2–SLAT TO BE A.S.T.M. A–653 GR 40 STRUCTURAL QUALITY STEEL WITH MIN Fy = 46.9 ksi. AND G–90 GALVANIZING PER A.S.T.M. A–653, OR A.I.S.I. 304 SERIES STAINLESS STEEL MANUFACTURED WITH A MINIMUM YIELD STRENGTH OF Fy = 46.9 ksi.

3– ALL STEEL ANGLES TO BE A.S.T.M. A–36 DESIGNATION, SHOP PRIMED AGAINST CORROSION PRIOR TO INSTALLATION. PAINT TO CONFORM TO FEDERAL SPECIFICATIONS CORRESPONDING TO RED OXIDE PAINT OR EQUAL.

4– WINDLOCKS TO BE "MALLEABLE IRON" Fy = 42 ksi OR A.I.S.I. DESIGNATION STEEL W/ Fy = 40 ksi., CHROME OR NICKEL PLATED.

5– ALL ASSEMBLY BOLTS TO BE S.A.E. GRADE 2 CADMIUM PLATED OR GALVANIZED STEEL.

6– STEEL WINDBARS TO BE A.S.T.M. A–36 DESIGNATION, SHOP PRIMED PRIOR TO INSTALLATION. PAINT TO CONFORM TO FEDERAL SPECIFICATIONS CORRESPONDING TO RED OXIDE PAINT OR EQUAL.

7– HOOD TO BE 24 GA. A.S.T.M. A–653 DESIGNATION G–90 FINISH TYPE COATING.

8– ALL RIVETS TO BE A.I.S.I. C1006 SPHERODIZED ANNEALED ALUMINUM LOW CARBON COLD HEADING QUALITY STEEL, ZINC PLATED, W/ 55.0 ksi. MINIMUM TENSILE STRENGTH, AS MANUFACTURED BY UNIVERSAL RIVET, INC.

9– CONCRETE ANCHORS TO BE AS MANUFACTURED BY HILTI, INC AND DEWALT, INC, AND SHALL BE INSTALLED FOLLOWING ALL OF THE RECOMMENDATIONS AND SPECIFICATIONS OF THE ANCHOR'S MANUFACTURER.

10– ALL WELDING TO CONFORM TO AMERICAN WELDING SOCIETY'S AWS D1.1 REGULATIONS. USE A.W.S A5.1 OR A5.5 E60XX ELECTRODES MIN. 3/16" FILLET SIZE.

11– INSULATION MATERIAL SHALL BE EPS–EXPANDED POLYSTYRENE INSULATION, MANUFACTURED BY DYPLAST PRODUCTS LLC. W/ MIAMI DADE COUNTY APPROVAL.

12– IT SHALL BE THE RESPONSIBILITY OF THE CONTRACTOR TO VERIFY THAT THE EXISTING STRUCTURE IS DESIGNED TO SUPPORT Vx AND Vy FORCES AT BOTH JAMBS. SEE SCHEDULE ON SHEET 3 OF 3, FOR Vx & Vy VALUES.

13– ROLL–UP MECHANISM NOT PART OF THIS APPROVAL.

14– (A) THIS P.E.D. PREPARED BY THIS ENGINEER IS GENERIC AND DOES NOT PROVIDE INFORMATION FOR A SITE SPECIFIC PROJECT; I.E. WHERE THE SITE CONDITIONS DEVIATE FROM THE P.E.D.
(B) CONTRACTOR TO BE RESPONSIBLE FOR THE SELECTION, PURCHASE AND INSTALLATION OF THIS PRODUCT BASED ON THIS P.E.D. PROVIDED HE/SHE DOES NOT DEVIATE FROM THE CONDITIONS DETAILED ON THIS DOCUMENT. CONSTRUCTION SAFETY AT SITE IS THE CONTRACTOR'S RESPONSIBILITY.
(C) THIS P.E.D. WILL BE CONSIDERED INVALID IF MODIFIED.
(D) SITE SPECIFIC PROJECTS SHALL BE PREPARED BY A FLORIDA REGISTERED ENGINEER OR ARCHITECT WHICH WILL BECOME THE ENGINEER OF RECORD (E.O.R.) FOR THE PROJECT AND WHO WILL BE RESPONSIBLE FOR THE PROPER USE OF THE P.E.D. ENGINEER OF RECORD, ACTING AS A DELEGATED ENGINEER TO THE P.E.D. ENGINEER, SHALL SUBMIT TO THIS LATTER THE SITE SPECIFIC DRAWINGS FOR REVIEW.
(E) ORIGINAL P.E.D. SHALL BEAR THE DATE AND ORIGINAL SEAL AND SIGNATURE OF THE PROFESSIONAL ENGINEER OF RECORD THAT PREPARED IT.

15– SHUTTER MANUFACTURER'S LABEL SHALL BE LOCATED ON A READILY VISIBLE LOCATION AT DOOR. ONE LABEL SHALL BE PLACED FOR EVERY OPENING. LABELING TO COMPLY WITH SECTION 1709.5.2.1.1 OF THE FLORIDA BUILDING CODE.

THIS DRAWING SHALL ONLY BE USED TO OBTAIN PERMITS IN THE STATE OF FLORIDA

WALTER A. TILLIT JR. LICENSE No. 44167 STATE OF FLORIDA PROFESSIONAL ENGINEER

P.E. SEAL/SIGNATURE/DATE

Florida Building Code (High Velocity Hurricane Zone)

©2020 TILTECO, INC

TILTECO INC.
TILLIT TESTING & ENGINEERING COMPANY
6355 N.W. 36th. St., Ste. 305, VIRGINIA GARDENS, Fl. 33166
Phone : (305)871–1530 . Fax : (305)871–1531
e–mail: tilteco@aol.com
CA–0006719
WALTER A. TILLIT Jr. P.E.
FLORIDA Lic. # 44167

26'–0" MAXIMUM WIDE, 20 GAGE SLAT ROLL–UP DOOR

ROLLING DOOR INDUSTRIES, LLC.
8214 NW 64 ST
MIAMI, FL. 33166
PH: 305–599–9977 FAX: 305–599–9979

DRAWN BY: F.P.

07/21/2020 DATE

20–213 DRAWING No

REV. No	DESCRIPTION	DATE	REV. No	DESCRIPTION	DATE
1	OLD 17–246	7/21/20	3		
2			4		

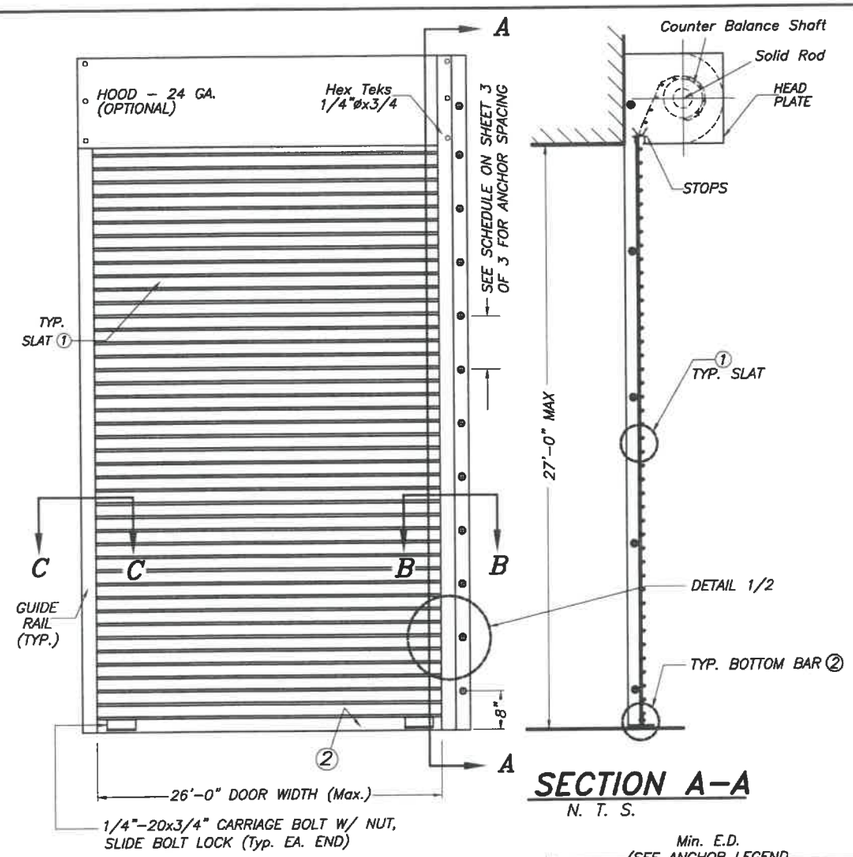

TYPICAL DOOR ELEVATION

N. T. S.

SECTION A–A

N. T. S.

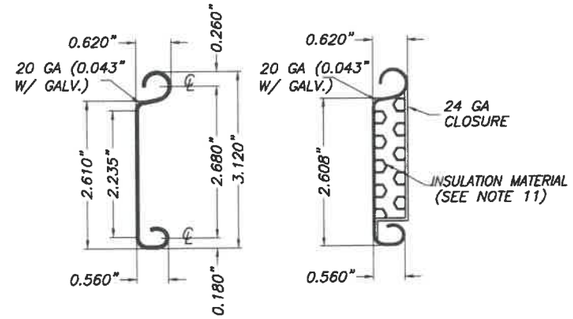

PLAIN **INSULATED**

1 FLAT SLAT

SCALE : 1/2" = 1"

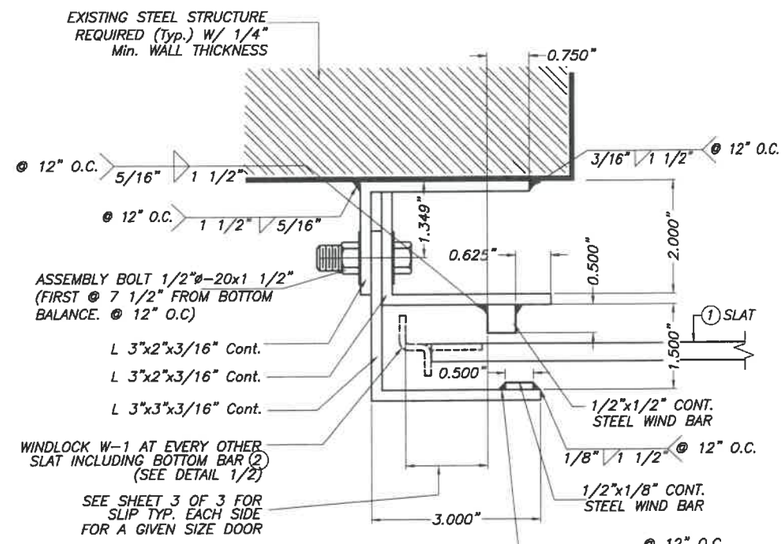

SECTION C–C

SCALE : 3/8" = 1"

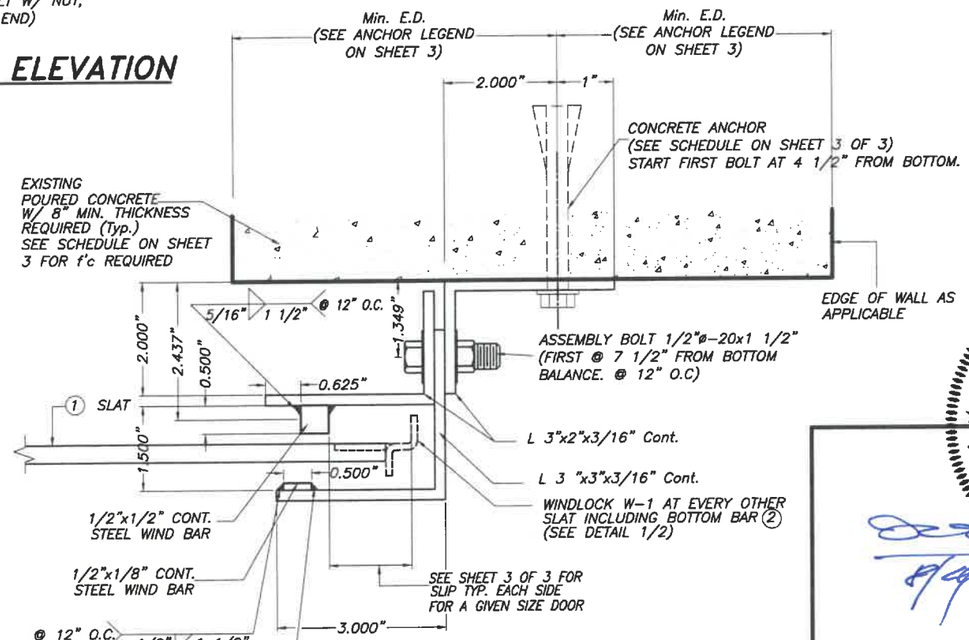

SECTION B–B

SCALE : 3/8" = 1"

WALTER A. TILLIT JR. LICENSE No. 44167 STATE OF FLORIDA PROFESSIONAL ENGINEER

8/4/2020

P.E. SEAL/SIGNATURE/DATE

Florida Building Code (High Velocity Hurricane Zone)

©2020 TILTECO, INC

TILTECO INC.
TILLIT TESTING & ENGINEERING COMPANY
6355 N.W. 36th. St., Ste. 305, VIRGINIA GARDENS, Fl. 33166
Phone : (305)871-1530 . Fax : (305)871-1531
e-mail: tilteco@aol.com
CA-0006719
WALTER A. TILLIT Jr. P.E.
FLORIDA Lic. # 44167

26'-0" MAXIMUM WIDE, 20 GAGE SLAT ROLL-UP DOOR

ROLLING DOOR INDUSTRIES, LLC.
8214 NW 64 ST
MIAMI, FL. 33166
PH: 305-599-9977 FAX: 305-599-9979

REV. No	DESCRIPTION	DATE	REV. No	DESCRIPTION	DATE
1	OLD 17-246	7/21/20	3		
2			4		

DRAWN BY: F.P.

07/21/2020 DATE

20-213 DRAWING No

SHEET 1A OF 3

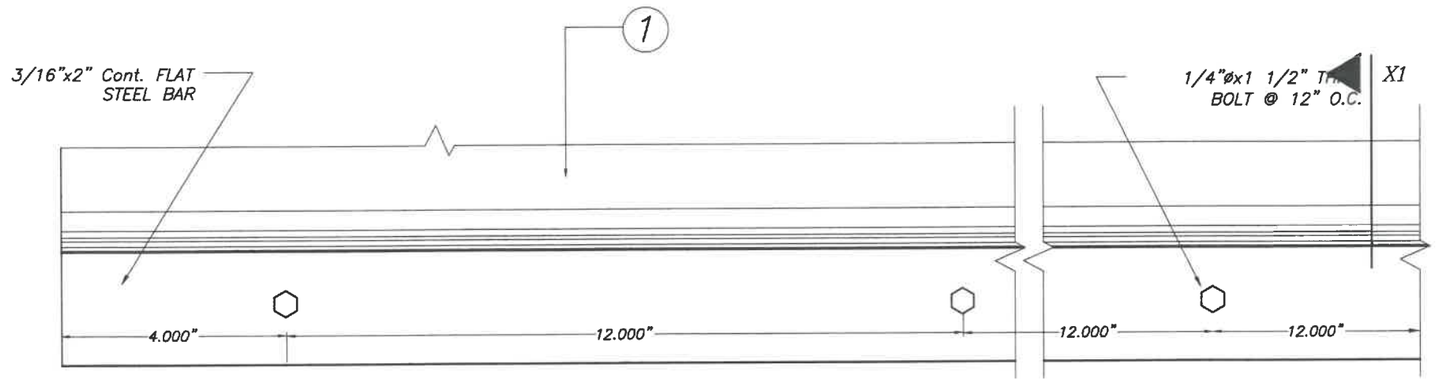

ELEVATION

2 BOTTOM BAR

SCALE : 3/8" = 1"

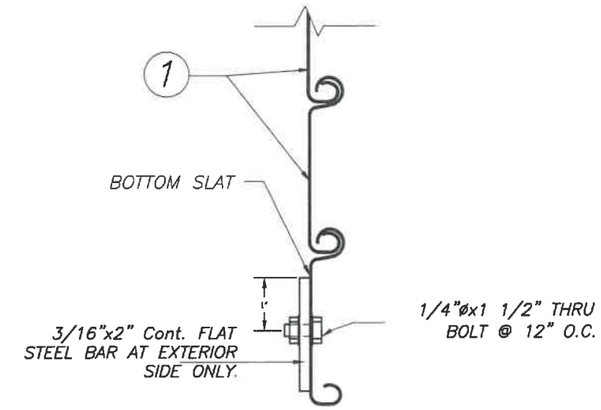

SECTION X1

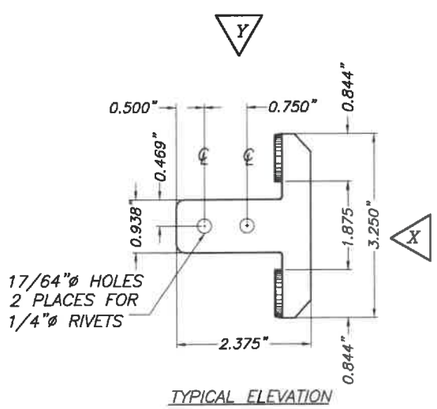

TYPICAL ELEVATION

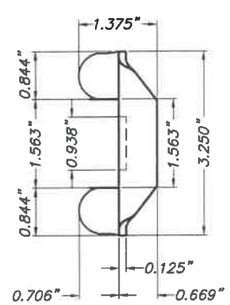

VIEW X

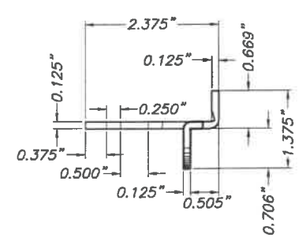

VIEW Y

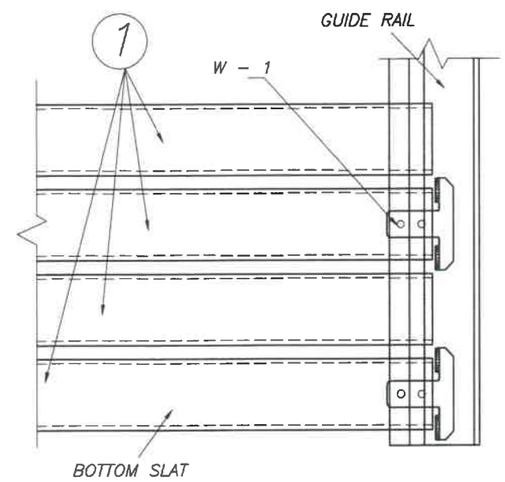

DETAIL 1 (elevation)

N.T.S.

3 TYPICAL WINDLOCK W – 1 DETAIL

SCALE : 3/8" = 1"

COMPONENTS

WALTER A. TILLIT JR. LICENSE No. 44167 STATE OF FLORIDA PROFESSIONAL ENGINEER

7/24/2020

SEAL/SIGNATURE/DATE

Florida Building Code (High Velocity Hurricane Zone)

©2020 TILTECO, INC

TILTECO INC.
TILLIT TESTING & ENGINEERING COMPANY
6355 N.W. 36th. St., Ste. 305, VIRGINIA GARDENS, Fl. 33166
Phone : (305)871-1530 . Fax : (305)871-1531
e-mail: tilteco@aol.com
CA-0006719
WALTER A. TILLIT Jr. P.E.
FLORIDA Lic. # 44167

26'-0" MAXIMUM WIDE, 20 GAGE SLAT ROLL-UP DOOR

ROLLING DOOR INDUSTRIES, LLC.
8214 NW 64 ST
MIAMI, FL. 33166
PH: 305-599-9977 FAX: 305-599-9979

REV. No	DESCRIPTION	DATE	REV. No	DESCRIPTION	DATE
1	OLD 17-246	7/21/20	3		
2			4		

DRAWN BY: F.P.

07/21/2020 DATE

20-213 DRAWING No

SHEET 2 OF 3

Vx & Vy REACTIONS & ANCHOR SPACING SCHEDULE

MAXIMUM A.S.D. DESIGN PRESSURE RATING (PSF)	DOOR WIDTH (Ft.)	SLIP (In)	Vx (Lb/Ft)	Vy (Lb/Ft)	MAX. ANCHOR SPACING TO POURED CONCRETE					
					ANCHOR TYPE 1 *			ANCHOR TYPE 2 *		
					f'c = 3 ksi Min.	f'c = 4 ksi Min.	f'c = 6 ksi Min.	f'c = 3 ksi Min.	f'c = 4 ksi Min.	f'c = 6 ksi Min.
+50.0, −50.0	16–0"	5/8"	1436	400	11"	11"	11"	11"	11"	11"
	18'–0"	1"	1419	450	11"	11"	11"	11"	11"	11"
	20'–0"	1 1/4"	1532	500	11"	11"	11"	11"	11"	11"
	24'–0"	1 1/2"	1885	600	10 1/2"	11"	11"	11"	11"	11"
	26'–0"	1 1/2"	2125	650	9"	10 1/2"	11"	10"	11"	11"
+55.0, −55.0	16–0"	5/8"	1591	440	11"	11"	11"	11"	11"	11"
	18'–0"	1"	1569	495	11"	11"	11"	11"	11"	11"
	20'–0"	1 1/4"	1689	550	11"	11"	11"	11"	11"	11"
	24'–0"	1 1/2"	2071	660	9 1/2"	10 1/2"	11"	10"	11"	11"
	26'–0"	1 1/2"	2331	715	8 1/2"	9 1/2"	10 1/2"	9"	10"	10 1/2"
+60.0, −60.0	16–0"	5/8"	1743	480	11"	11"	11"	11"	11"	11"
	18'–0"	1"	1718	540	11"	11"	11"	11"	11"	11"
	20'–0"	1 1/4"	1845	600	10 1/2"	11"	11"	11"	11"	11"
	24'–0"	1 1/2"	2256	720	8 1/2"	10"	10 1/2"	9 1/2"	10 1/2"	11"
	26'–0"	1 1/2"	2536	780	7 1/2"	8 1/2"	9 1/2"	8 1/2"	9 1/2"	9 1/2"
+70.0, −70.0	16–0"	5/8"	2046	560	10"	11"	11"	10 1/2"	11"	11"
	18'–0"	1"	2012	630	10"	11"	11"	10 1/2"	11"	11"
	20'–0"	1 1/4"	2155	700	9"	10"	11"	9 1/2""	11"	11"
	24'–0"	1 1/2"	2611	840	7 1/2"	8 1/2"	9"	9"	9"	9 1/2"
	26'–0"	1 9/16"	2881	910	7 1/2" ▲	7 1/2"	8 1/2"	6 1/2"	8"	8 1/2"

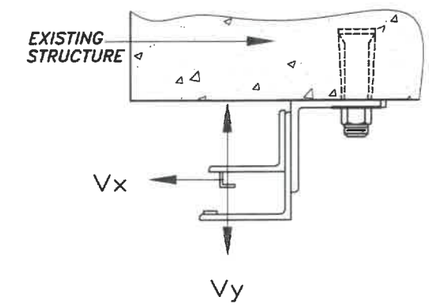

LOAD DIAGRAM

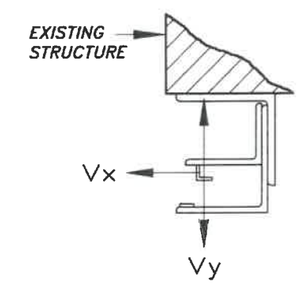

LOAD DIAGRAM

ANCHOR LEGEND

* **ANCHOR TYPE 1:** – 5/8"ø DEWALT, INC WEDGE BOLT ANCHOR W/ 5" MINIMUM EMBEDMENT, 6" MIN. EDGE DISTANCE & 8" MIN. WALL THICKNESS.

ANCHOR TYPE 2: – 3/4"ø HILTI KWIK BOLT 3 EXPANSION ANCHOR W/ 6 1/2" MIN. EMBEDMENT, 6" MIN. EDGE DISTANCE 8" MIN. WALL THICKNESS. ONLY ALLOWED TO BE USED AT JURISDICTIONS WHERE COMPLIANCE W/ ACI 318–14 IS NOT ENFORCED BY BUILDING OFFICIAL.

▲ SPACING ONLY VALID FOR 7 1/2" MIN. EDGE DISTANCE

WALTER A. TILLIT JR. LICENSE No. 44167 STATE OF FLORIDA PROFESSIONAL ENGINEER

P.E. SEAL/SIGNATURE/DATE

Florida Building Code (High Velocity Hurricane Zone)

©2020 TILTECO, INC

TILTECO INC.
TILLIT TESTING & ENGINEERING COMPANY
6355 N.W. 36th. St., Ste. 305, VIRGINIA GARDENS, FL. 33166
Phone : (305)871–1530 . Fax : (305)871–1531
e–mail: tilteco@aol.com
CA–0006719
WALTER A. TILLIT Jr. P.E.
FLORIDA Lic. # 44167

26'–0" MAXIMUM WIDE, 20 GAGE SLAT ROLL–UP DOOR

ROLLING DOOR INDUSTRIES, LLC.
8214 NW 64 ST
MIAMI, FL. 33166
PH: 305–599–9977 FAX: 305–599–9979

REV. No	DESCRIPTION	DATE	REV. No	DESCRIPTION	DATE
1	OLD 17–246	7/21/20	3		
2			4		

DRAWN BY: F.P.

07/21/2020 DATE

20–213 DRAWING No

SHEET 3 OF 3